h66

OWNER'S MANUAL

Orion Packaging Inc.
4263 Richelieu
Montreal H4C 1A1
Tel.: 514-937-6642

ORION PACKAGING INC.

NOTICE

In order to acquire more information about custom make features of the machine; and to provide quicker service, the following information is required when making an inquiry for a machine:

1) Serial Number
2) Model Number
3) Subassembly-Part Location

ORION PACKAGING INC. MONTREAL

TABLE OF CONTENTS

ORION PACKAGING SYSTEMS, INC.
DISTRIBUTOR PRICE LIST - EFFECTIVE NOVEMBER 1, 1989

ORION MODEL H-66R

Spiral Semi-Automatic High Profile with Ring Gear

Maximum Load Size	55"W x 55"L x 82"H (Recommended) 60"W x 60"L x 85"H (Theoretical)*
Weight Capacity	5,000 lbs. dynamic, 20,000 lbs. static
Utilities	115/1/60 20 Amp Electrical Service
Turntable	48" x 48" Octagonal Formed 3/8" Steel 20" Dia. Ring Gear Turntable Support 11" Height Floor to Top of Turntable
Turntable Drive	0-12 RPM Variable Turntable Speed 1/2 HP DC Drive Motor Pinion Gear Turntable Drive Electronic Soft Start Positive Alignment Feature
Control Features	Electronic Film Force Control Separate Top and Bottom Wrap Selectors Variable Speed Film Carriage Control Auto-Height Photocell w/On/Off Switch Film Carriage Raise/Lower Switch Turntable Jog Pushbutton Spiral Up or Up/Down Cycles Current Overload Protection NEMA 12 Electrical Enclosure
Film Delivery	20" Orion MultiStretch Power Prestretch Electronic Film Tension Control End of Cycle Film Force Release Full Authority Film Dancer Bar Timing Gear/Belt Stretch Ratio Control 1/3 HP DC/SCR Film Drive
Film Carriage Drive	#50 Roller Chain Carriage Lift 1/3 HP Elevator Drive Motor Variable Speed SCR Control Structural "H" Channel Guidance Precision Cam Follower Tracking
Structural Features	Forklift Portable Base Design All Structural Steel Construction Film Roping Bar 8" x 18 lb./ft. "H" Channel Mast
Est. Shipping Weight	900 lbs.

*Theoretical is based upon removal of roping bar, and reflects maximum film web height attainable

ORION PACKAGING INC.
DISTRIBUTOR PRICE LIST - EFFECTIVE NOVEMBER 1, 1989

SEMI-AUTOMATIC MACHINE OPTIONS

AUTO-HEIGHT PHOTOCELL

77 series.....

LOADING RAMPS FOR LOW PROFILES

L77/66.....
L55S/44S.....
L55/44.....
L66-72.....

MACHINE BASE EXTENSIONS (MAX. 3 FT)

H77/66 (per foot).....
L77/66 (per foot).....

H55/44 (per foot).....
L55/44 (per foot).....
L55S/44S (per foot).....

MACHINE MAST EXTENSIONS (MAX. 3 FT)

All Series (Except "M") (first foot).....
(each additional foot).....

M77/67/66 (per foot).....
M57/55 (per foot).....
M44 (per foot).....

HINGED TOWER (FOR TRANSPORT IN LOW TRUCKS)

All Series (Except "M").....

ORION PACKAGING INC.
DISTRIBUTOR PRICE LIST - EFFECTIVE NOVEMBER 1, 1989

SEMI-AUTOMATIC MACHINE OPTIONS

PNEUMATIC TOP PLATENS

36" circular platen with 24" stroke.....
36" circular platen with 36" stroke.....

48" x 48" square platen with homing.....
device, and 36" stroke
48" x 48" square platen with homing.....
device, and 48" stroke

TRANSFORMER

To accept 430/60 or 575/60.....
For each additional conveyor section.....

DUAL TURNTABLE OPTION

L66.....
H66.....
L55/44.....
H55/44.....
L55S/44S.....

NOTE: Dual Turntable options includes second turntable with all drive components & controls, second auto-height photocell, and table selector switch.

NOTE: When a ring gear/pinion gear turntable drive is required, the cost of 2 ring gear options must be added to the dual turntable option price.

RING GEAR/PINION GEAR TURNTABLE DRIVE

H66....(20" DIA.).....
H55....(25" DIA.).....
H44....(33" DIA.).....

Central lubrication point for ring gear.....

ORION PACKAGING INC.
DISTRIBUTOR PRICE LIST - EFFECTIVE NOVEMBER 1, 1989

SEMI-AUTOMATIC MACHINE OPTIONS

PROGRAMMABLE LOGIC CONTROLLER OPTIONS

66/55 Series - Allen Bradley SLC-100.....
44 Series - Allen Bradley SLC-150.....

EEPROM ordered with machine.....
EEPROM ordered after shipping of the machine.....

CYCLE COUNTER (inside control panel).....

TURNTABLE OPTIONS

0-12 RPM Variable Speed Turntable Drive for.....
L/H 77 Models

0-12 RPM Variable Speed Turntable Drive with.....
Positive Alignment Feature for L/H 77 Models

10,000 lb Capacity (H55/44).....

8,000 lb Capacity (L55/44).....

10,000 lb Capacity (L55/44).....

Anti-Skid Surface.....

72" dia. round, 3/8" with 4" skirt (H55/44).....

72" dia. round, 1/2" (L44/44S,L55/55S).....

72" dia. round, 1/2" (L66).....

72" dia. round, 3/8" (L66).....

60" dia. round, 1/2" (L66/55/44).....

Reinforced Concentric Rings.....

Remote Pull Switch.....

Filler Plate (H77/66).....

Filler Plate (H55/44).....

ORION PACKAGING INC.
DISTRIBUTOR PRICE LIST - EFFECTIVE NOVEMBER 1, 1989

SEMI-AUTOMATIC MACHINE OPTIONS

COLD TEMPERATURE OPTIONS (-20 F)

Heated Control Enclosure, Silicon Rubber Wiring.....
and Special Lubricant in Reducers

CONVEYOR OPTIONS

IDLER ROLLER (NON-DRIVEN)

72" Dia. idler roller turntable for H66/55/44.....
(On H-66, requires ring gear option and
max. wt. 2,500 lbs) Rollers are 3.5" Dia.
on 4.5" centers, with manual brake.

72" Dia. idler roller turntable for L55S/44S.....
Rollers are 3.5" Dia. on 4.5" centers, with
manual brake.

Pneumatic Roller Brake for "L" Series.....

Pneumatic Roller Brake for "H" Series.....

5' Length CONTOURED Idler Roller Conveyor,.....
3.5" Dia. Rollers on 4.5" Centers, 50" Wide
Roller Face.

5' Length STRAIGHT Idler Roller Conveyor,.....
3.5" dia. rollers on 4.5" centers,
50" wide roller face.

POWERED ROLLER

55 STYLE (Powered Roller Turntable)

76" Dia. powered roller TURNTABLE, Rollers.....
rollers 3.5" dia. on 4.5" centers, all full
length driven. Includes 1/2 hp AC drive,
adjustable speed. Wall tubing 1/8"
(H55/44 only - requires ring gear option)

ORION PACKAGING INC.
DISTRIBUTOR PRICE LIST - EFFECTIVE NOVEMBER 1, 1989

SEMI-AUTOMATIC MACHINE OPTIONS

44 STYLE (Powered Roller Turntable)

76" Dia. Powered Roller TURNTABLE, Rollers.....
3.5" Dia. on 4.5" Centers, All Full Length
Driven. Includes 1/2 hp DC Drive, Adjust-
able Speed. Wall Tubing 3/16", Cast Iron
Pillow Blocks. (NOTE: H55/44 only, requires
RING GEAR OPTION)

55 STYLE (CONTOURED Powered Roller Conveyor)

5' Length CONTOURED Powered Roller Conveyor,.....
3.5" Dia. Rollers on 4.5" Centers, 50"
Effective Width, All Full Length Rollers
Driven. Includes 1/2 hp AC Drive, Non-
Reversing. Wall tubing 1/8"

44 STYLE (CONTOURED Powered Roller Conveyor)

5' Length CONTOURED Powered Roller Conveyor,.....
3.5" Dia. Rollers on 4.5" Centers, 52"
Effective Width, All Full Length Rollers
Driven, Cast Iron Pillow Blocks.
Includes 1/2 hp DC Drive, Variable
Speed, with Soft Start.

Automatic Sequencing, Logic and Photocell.....
For Powered Conveyor (Per Section) - Includes
Photocell PLC Input and Output/Program.

Turntable Mechanical Home Position Lock.....
(Pneumatic, Positive Lock)

ORION PACKAGING INC.
DISTRIBUTOR PRICE LIST - EFFECTIVE NOVEMBER 1, 1989

SEMI-AUTOMATIC MACHINE OPTIONS

FILM CARRIAGE OPTIONS

Double #60 Chain Carriage Lift.....

20" Multistretch Retrofit Carriage.....
(For Installation on Existing Machines)

30" Multistretch Retrofit Carriage.....
(For Installation on Existing Machines)

30" Multistretch Carriage Upgrade from 20".....
on H66/55/44 and L66/55/66.

30" Multistretch Carriage Upgrade from 20".....
on M66/55/44.

30" Econostretch Carriage Upgrade on 77 .....
Series from 20".

ELECTRONIC SCALE PACKAGE OPTION

Includes Heavy Duty Load Cells Incorporated.....
into the Machine or Conveyor Frame, Protected
from Lateral Shock, and a Digital Display of
Load Weight, with RS-232C Port, Gross, Net
Tare, Zero.

NOTE: On L-77 and L-66 models, scale option
reduces machine capacity to 2500 lbs.,
unless base reinforcement option is
ordered.

Base Reinforcement on L-77 or L-66 models,.....
when 4000 lbs capacity is desired with
scale package.

4. PARTS LISTS

4.1 Tower Parts List

The exploded assembly drawing of the Small Tower is shown on drawing number 200 190. Table 1 has the parts listed in order of part number. Note: the names given to the parts are generic.

TABLE 1

Tower Parts List

Part Number	Description	Quantity
10067	Cam follower (1/2 inch O.D.)	4
10330	10-24 UNC x 2 long SHCS	2
10331	Knob	2
10332	Limit switch	2
10333	Limit switch bracket	2
10334	Channel guide	2
10335	Channel	1
10336	1/4-20 UNC x 1/2 long SHCS	2
10337	Chain cover	1
10338	Limit switch actuator	1
10339	Right carriage holder	1
10340	3/8-16 UNC x 1 long hex bolt	2
10341	Chain tensioner	1
10342	Tower	1
10343	Elevator driver sprocket	1

10344	Reducer (40:1)	1
10345	1/4-20 UNC x 1/2 long SHCS	3
10346	Motor (1/3 hp, 90 VDC)	1
10347	5/16-18 UNC x 1 long hex bolt	4
10348	3/16 square key	1
10349	Chain link pin	2
10350	Chain	1
10351	3/8-16 UNC x 2 long hex bolt	4
10384	1" collar	2
10385	Elevator idler sprocket	1
10386	Left carriage holder	1
10387	Chain tensioning screw	2

4.2 Carriage Parts List

The exploded assembly drawing of the Standard carriage is shown on drawing number 200 100. Table 2 has the parts listed in order of part number. Note: the names given to the parts are generic.

TABLE 2

Carriage Parts List

Part Number	Description	Quantity
10010	Cam follower (1 3/8 inch O.D.)	1
10017	Roller bracket	1
10020	Multistretch mechanism cover	1
10021	Spacer	1
10022	Belt tensioner	1
10023	30" Pressure roller	1
10024	20" Pressure roller	1
10026	30" Center dancer roller	1
10027	30" Roller	1
10030	Top dancer lever	1
10031	Bottom dancer lever	1
10033	20" Center dancer roller	1
10034	20" Roller	1
10037	30" x 3" dia. rubber roller	1
10038	30" x 4" dia. rubber roller	1
10039	20" x 3" dia. rubber roller	1
10040	20" x 4" dia. rubber roller	1
10042	3/4" flanged bearing unit	2

10043	1" Fillow block	1
10044	Prestretch driver pulley	1
10045	Potentiometer coupling	1
10046	Potentiometer bracket	1
10047	Film tension spring	2
10048	Spring adjustment screw	2
10049	Brake pad	2
10050	Film spool mandrel	1
10051	Top mandrel	1
10052	1" Collar	6
10054	Bottom mandrel	1
10058	Broze bushing	2
10061	Prestretch transmission (5:1 worm & gear)	1
10068	Cover bracket	2
10091	Channel guide	1
10092	Knob	1
10118	Photoswitch	1
10121	Channel bracket	1
10122	30" Channel	1
10133	Prestretch driven pulley	1
10146	Timing belt	1
10155	20" Channel	1
10156	Photoswitch bracket	1
10157	3/4 inch pillow block	1
10227	3/16 inch square key	1
10296	Channel screw	2
10297	3/16 inch square key	1

10298	5/16-18 UNC x 1/2 long SHCS	2
10299	Multistretch cover screw	3
10300	3/8-16 UNC x 2 long SHCS	1
10301	5/16-18 UNC x 2 1/2 long Hex bolt	4
10302	8-32 UNC x 1/2 long BHCS	8
10303	Bumper	2
10304	10-24 UNC x 1 long SHCS	2
10305	5/16-18 UNC x 1/2 long SHCS	2
10306	1/4-20 UNC x 1 long CHCS	2
10307	Feedback potentiometer	1
10308	10-24 UNC x 1/2 long SHCS	2
10309	1/4" square key	1
10310	10-24 UNC x 1/2 long SHCS	2
10368	3/8-16 UNC x 1 long hex bolt	4
10458	20" Carriage frame	1
10459	30" Carriage frame	1
30095	Prestretch motor (1/3 hp, 1750 rpm)	1

ORION PACKAGING INC.
BASE AND TURNTABLE SUBASSEMBLY PARTS LIST

MODEL H66R

ORION P/N	DESCRIPTION	QTY
10036	Motor (1/2 hp, 90vdc, 1750 rpm)	1
10091	Channel Guide	1
10092	Knob	1
10202	Proximity Switch Channel	1
10203	Proximity Switch Holder	1
10465	Reducer (BQ175, 20:1, assy 2)	1
10739	Proximity Switch	1
10798	Base	1
10801	External Ring Gear (20" dia., 99 teeth)	1
10802	Pinion Gear (12 teeth, module 5)	1
10806	Turntable (48"x48" oct. formed, 3/8" steel)	1

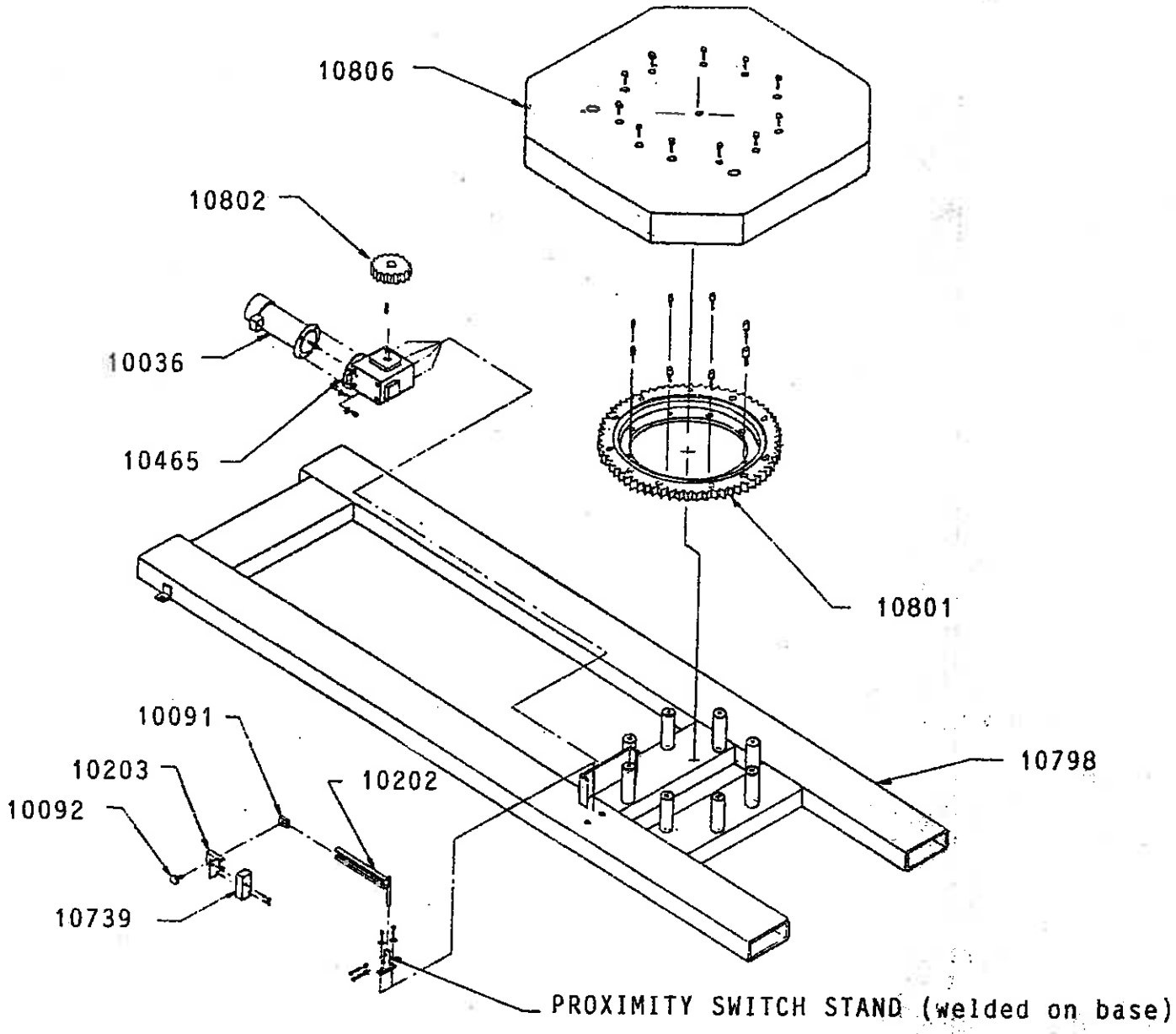

BASE AND TURNTABLE SUBASSEMBLY - H66R

6.4 Turntable Jog Switch

The Turntable jog switch is a pushbutton switch that will turn the turntable in a clockwise direction (as viewed from the top) when the switch is held depresed. When the switch is released the turntable will stop.

The Turntable jog switch is inoperative during the wrap cycle.

6.5 Carriage Control Switch

The Carriage Control switch is a monostable three positon switch with the following settings,

RAISE - Raises the carriage until the top limit switch on the tower is activated or until the photoswitch senses that the top of the load has been reached.

LOWER - Lowers the carriage until the bottom limit switch on the tower is activated.

The switch is normally in the middle position where the carriage remains stationary. Turning the switch to the RAISE or LOWER position will activate the carriage to move in its respective direction.

6.6 Photocell Switch

The Photocell switch has two settings,

ON - When turned ON, the photocell senses whether or not the carriage has reached the top of the load. The carriage will stop and begin the top wraps sequence once the top of the load is reached. The carriage will always stop at the top of the load regardless of its height. The photoswitch's position on the track can be adjusted in order to make the carriage pass the top of the load and overlap the top.

OFF - When turned OFF, the photocell is inoperative and the carriage will stop only once the top limit switch has been activated.

6.4 Turntable Jog Switch

The Turntable jog switch is a pushbutton switch that will turn the turntable in a clockwise direction (as viewed from the top) when the switch is held depresed. When the switch is released the turntable will stop.

The Turntable jog switch is inoperative during the wrap cycle.

6.5 Carriage Control Switch

The Carriage Control switch is a monostable three positon switch with the following settings,

RAISE - Raises the carriage until the top limit switch on the tower is activated or until the photoswitch senses that the top of the load has been reached.

LOWER - Lowers the carriage until the bottom limit switch on the tower is activated.

The switch is normally in the middle position where the carriage remains stationary. Turning the switch to the RAISE or LOWER position will activate the carriage to move in its respective direction.

6.6 Photocell Switch

The Photocell switch has two settings,

ON - When turned ON, the photocell senses whether or not the carriage has reached the top of the load. The carriage will stop and begin the top wraps sequence once the top of the load is reached. The carriage will always stop at the top of the load regardless of its height. The photoswitch's position on the track can be adjusted in order to make the carriage pass the top of the load and overlap the top.

OFF - When turned OFF, the photocell is inoperative and the carriage will stop only once the top limit switch has been activated.

7. CYCLE CONTROLS

7.1 Film Tension

The film tension may be adjusted through the film tension control potentiometer. The pot has a range of tension from 0 to 10, 10 being the highest tension rating. This pot may be adjusted during the cycle.

CAUTION: Light loads may require lower tension settings than heavier loads.

The film tension is controlled through the danser bar system. Occasionally the feedback potentiometer may need some adjustment. The adjustment of the feedback potentiometer can be performed while there is no film on the carriage. The bottom screw on the potentiometer coupling must first be loosened. Once the screw is loosened the potentiometer shaft must be turned until the prestretch motor just begins to hum but does not rotate, at which point the screw can be tightened. NOTE: the condition in which the motor hums but doesn't turn must be maintained even after the screw is tightened, if not, the adjustment procedure must be repeated.

7.2 Carriage Speed

The carriage speed control can be used to control the amount of overlap the film will have on itself during a wrap.

The control potentiometer has settings from 0 to 10, the higher settings being the fastest. High settings will mean less film overlap because of faster carriage speed, and low settings will mean more film overlap because of slower carriage speeds.

7.3 Top And Bottom Wraps

There are two multi-position switches which control the number of wraps that may be put at the top and bottom of the load. Each switch has positions going from 1 to 10 corresponding to the number of wraps which may be applied at the top or bottom of the load.

These switches may be set before the cycle begins.

8. MACHINE MAINTENANCE

8.1 Speed Reducer Maintenance

On the reducing transmission, after the first week all external cap screws and plugs should be checked for tightness. It is recommended to change the oil every six months or every 2500 hours of operation, whichever comes first. When adding oil the transmission should never be filled above the oil level mark indicated because leakage and overheating may occur. Below is a list of the type of lubricant that should be used.

Manufacturer	Lubricant
American Oil Co.	American Cyl. Oil No. 196-L
Cities Service Oil Co.	Citgo Cyl. Oil 180-5
Gulf Oil Corp.	Gulf Senate 155
Mobile Oil Corp.	Mobil 600 W Super Cyl. Oil
Phillips Oil Co.	Andes S 180
Texaco Inc.	624-650T Cyl. Oil
Shell Oil Co.	Velvata Oil J82
Union Oil Of Cal.	Red Line Worm Gear Lube 140

Reducing transmissions are found on the carriage, under the turntable, and at the base of the tower.

8.2 Motor Maintenace

An occasional inspection of the brushes should be made in order to establish a wear rate. Replacement brushes should be installed before old brushes wear to 9/16" long, measured on the long side. After

replacing brushes run the motor near rated speed for at least 1/2 hour with no load to seat the new brushes. Failure to properly seat the new brushes may cause commutator damage and rapid wear of the new brushes. If the commutator becomes rough, scored, or out of round, a competent motor shop should disassemble the motor and resurface the commutator. With every third brush change, have a competent motor shop resurface the commutator and blow the carbon dust out of the motor.

8.3 Chain Maintenance

To clean and relubricate chains, wipe them with an oily cloth every month. If the environment is very dusty or damp, it may be necessary to clean and relubricate the chains more often.

With time the chains will tend to stretch. A loose elevator chain should be tightened at the chain tensioner as shown on drawing number 200 192. A loose turntable drive chain should be tightened by pulling back on the reducer under the turntable after having its bolts loosened.

8.4 Cam Follower Maintenance

The cam followers behind the carriage have deep grease pockets and do not need frequent relubrication.

The portion of the tower on which the cam followers roll should be cleaned and regreased every 300 hours of operation. If the machine operates in a dusty or corrosive environment the tower should be relubricated more often.

8.5 Caster Maintenance

The two swivelling casters under the turntable may be relubricated every 300 hours of operation by

injecting a good quality lithium based grease into the grease nipples.

The drive wheel bearings are factory greased and sealed so they need not be relubricated in their lifetime.

8.6 Ring Gear Maintenance

If the stretchwrapper has the optional ring gear turntable drive and support system, this maintenance routine must be performed.

The ring gear is located under the turntable and should be lubricated at fixed intervals. This should be carried out by injecting grease into all the lubrication nipples in succession until a collar of fresh grease appears around the perimeter of both sealing rings. The bearing sould be rotated slowly during lubrication.

The relubrication interval depends on the operating conditions. For bearings exposed to an aggressive environment, relubrication should occur every 50 operating hours. Normally, relubrication should occur every 100 to 200 hours of operation. The gear teeth should also be relubricated. Lubricants of different manufacture recommended for the ring gear are shown below.

Manufacturer	Raceway Grease	Gear Teeth Oil
BP	Energrease LS 2	Energol WRL
Castrol	Spheerol AP 2	Grippa 33 S
ESSO	Beacon 2	Surret Fluid 30
Gulf	Crown Grease No.2	Lubcote No.2
Mobil	Mobilux 2	Mobiltac E
SHELL	Alvania Grease R 2	Cardium Compound C/Fluid C
Texaco	Glissando FT 2	Crater 2 X Fluid
Valvoline	LB-2	FGC

APPENDIX C

ORION PACKAGING INC.

NOTICE

The manual covers standard features of the machine. Certain machine options may not be covered fully by this manual due to their unique application.

ORION MULTISTRETCH

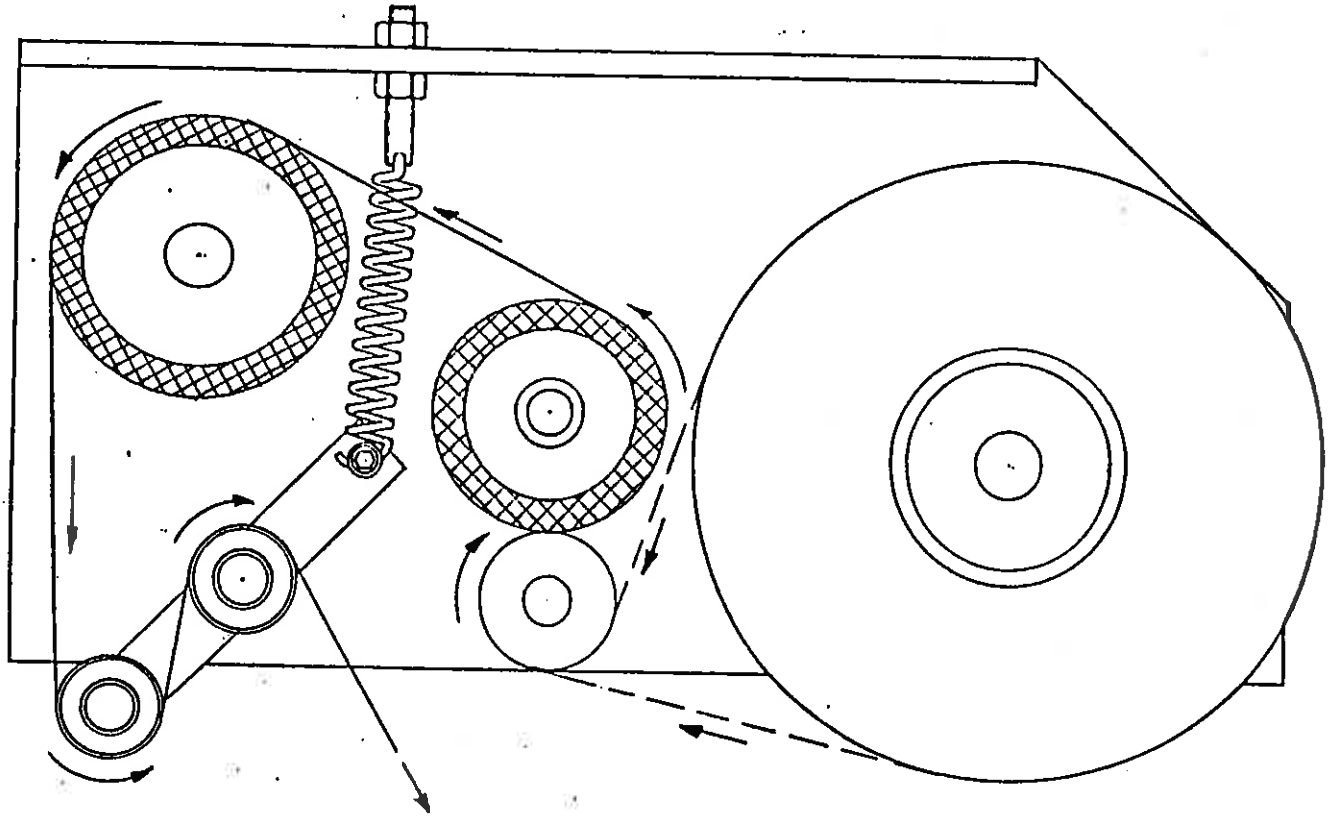

DISCONNECT POWER BEFORE FEEDING

This diagram shows the pattern the film must take around the rollers for the proper operation of the stretchwrapper.

WARNING: The machine must be disconnected from the power source before the flim is fed through the rollers. Failure to do this may result in serious injury to the operator and damage to the machine.

Electrical Boards' Chart
for
ORION Stretchwrappers

	168-4	168-A	236	336	750+	750M-24V	850M	850C	155-3A
MLH 44 Processor	X		X		X				
MLH 44	X		X		X				X
MLH 55		X		X			X		X
MLH 66		X		X			X		X
MLH 77		X							X
PA 33	X			X	X				
FA 33	X			X		X		X	
MA 33	X			X		X		X	
MA 44	X			X	X			X	
MA 55	X			X			X	X	

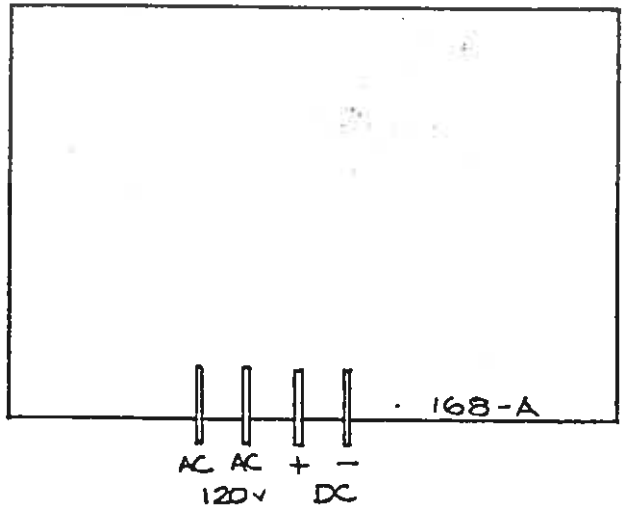

ORION PACKAGING INC

ÉCHELLE: SCALE: N.T.S.	APPROUVE PAR: APPROVED BY:	DESSINE PAR: DRAWN BY: VALENTINI
DATE: 16-9-87		REVISE PAR: REVISED BY:
168-A		
		NUMERO DE DESSIN DRAWING NUMBER 200 891 A

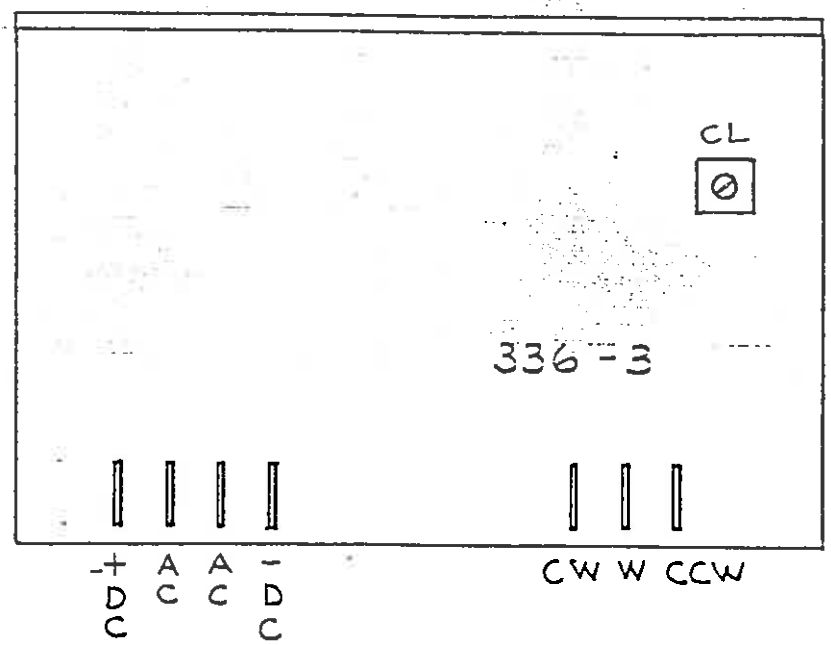

CL : CURRENT LIMITER

ORION PACKAGING INC.

ECHELLE: SCALE: N.T.S.	APPROUVE PAR: APPROVED BY:	DESSINE PAR: DRAWN BY: VALENTINI
DATE: 16-9-87		REVISE PAR: REVISED BY:
336-3		
		NUMERO DE DESSIN DRAWING NUMBER 200 890

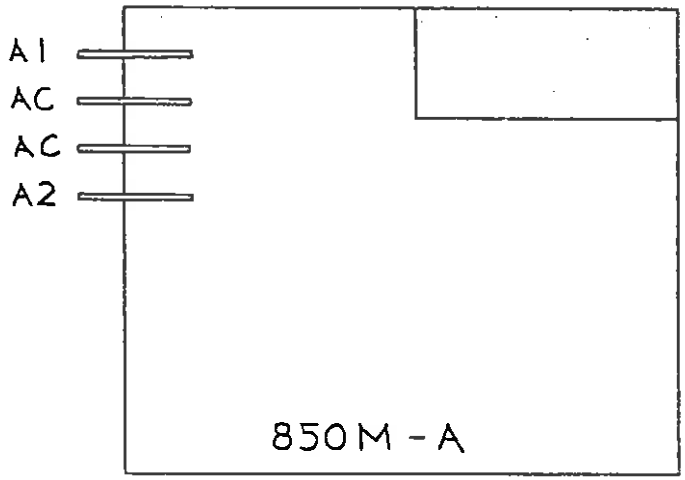

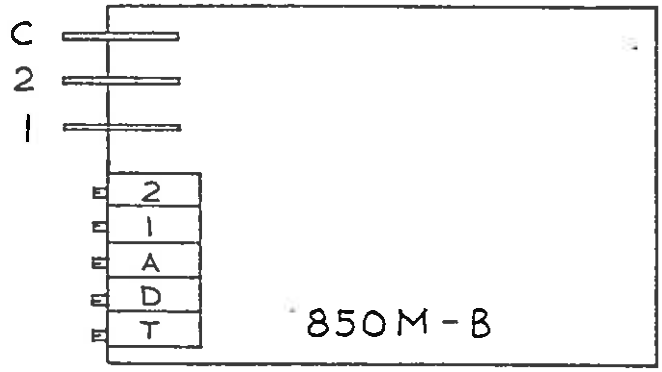

2 : LOW SPEED ADJ.
1 : HIGH SPEED ADJ.
A : ACCELERATION ADJ.
D : DECELERATION ADJ.
T : CURRENT LIM.

ORION PACKAGING INC.		
ECHELLE: SCALE: N.T.S.	APPROUVE PAR: APPROVED BY:	DESSINE PAR: DRAWN BY: VALENTINI
DATE: 16-9-87		REVISE PAR: REVISED BY:
850 M		
		NUMERO DE DESSIN DRAWING NUMBER 200 837

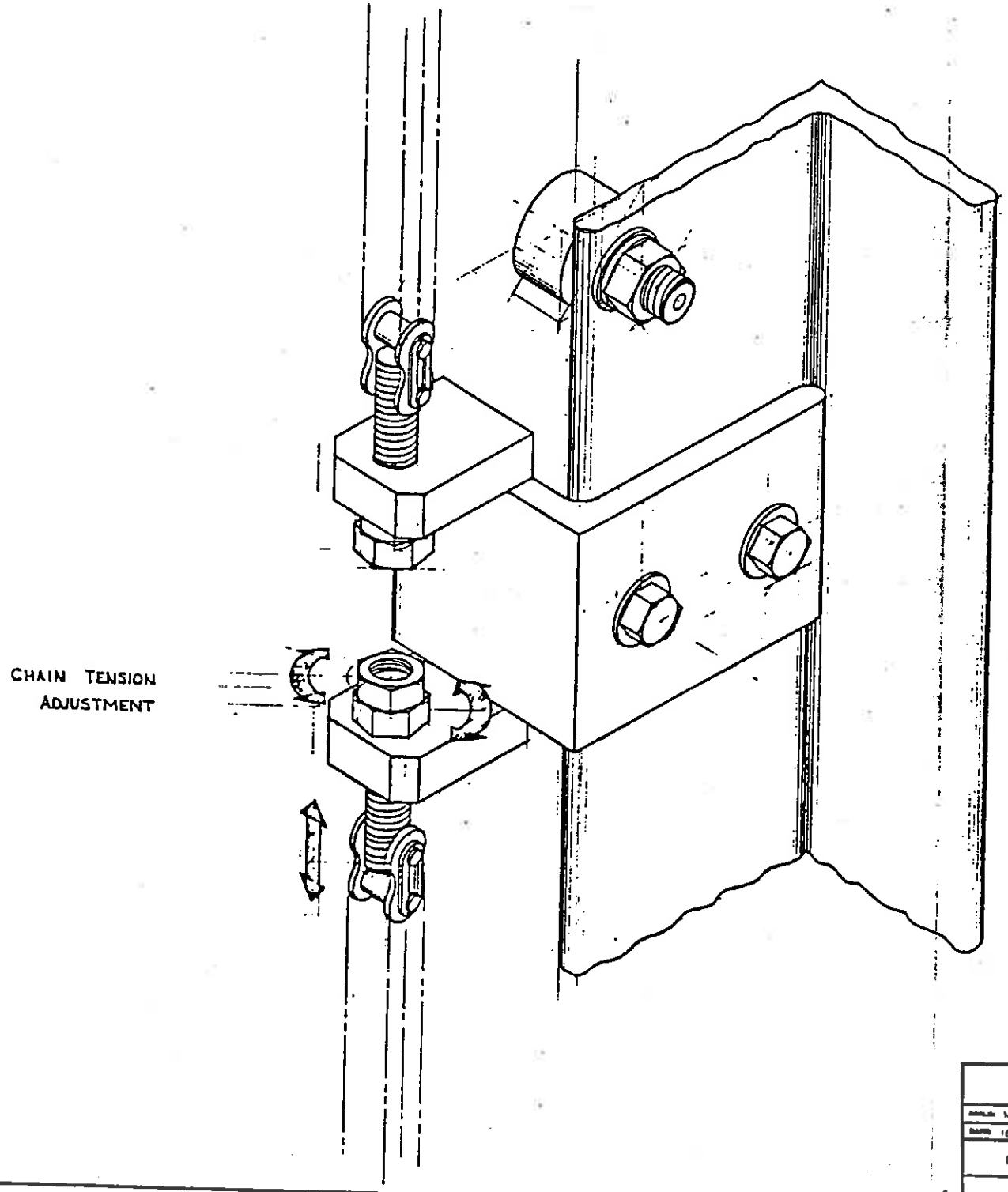

ORION PACKAGING

SCALE N.T.S.	APPROVED BY	DRAWN BY VALENTINI
DATE 10-7-86		DATE

CHAIN TENSIONER ASS'Y

DRAWING NUMBER 200-192

Motor dimensions

TEFC P/M motor

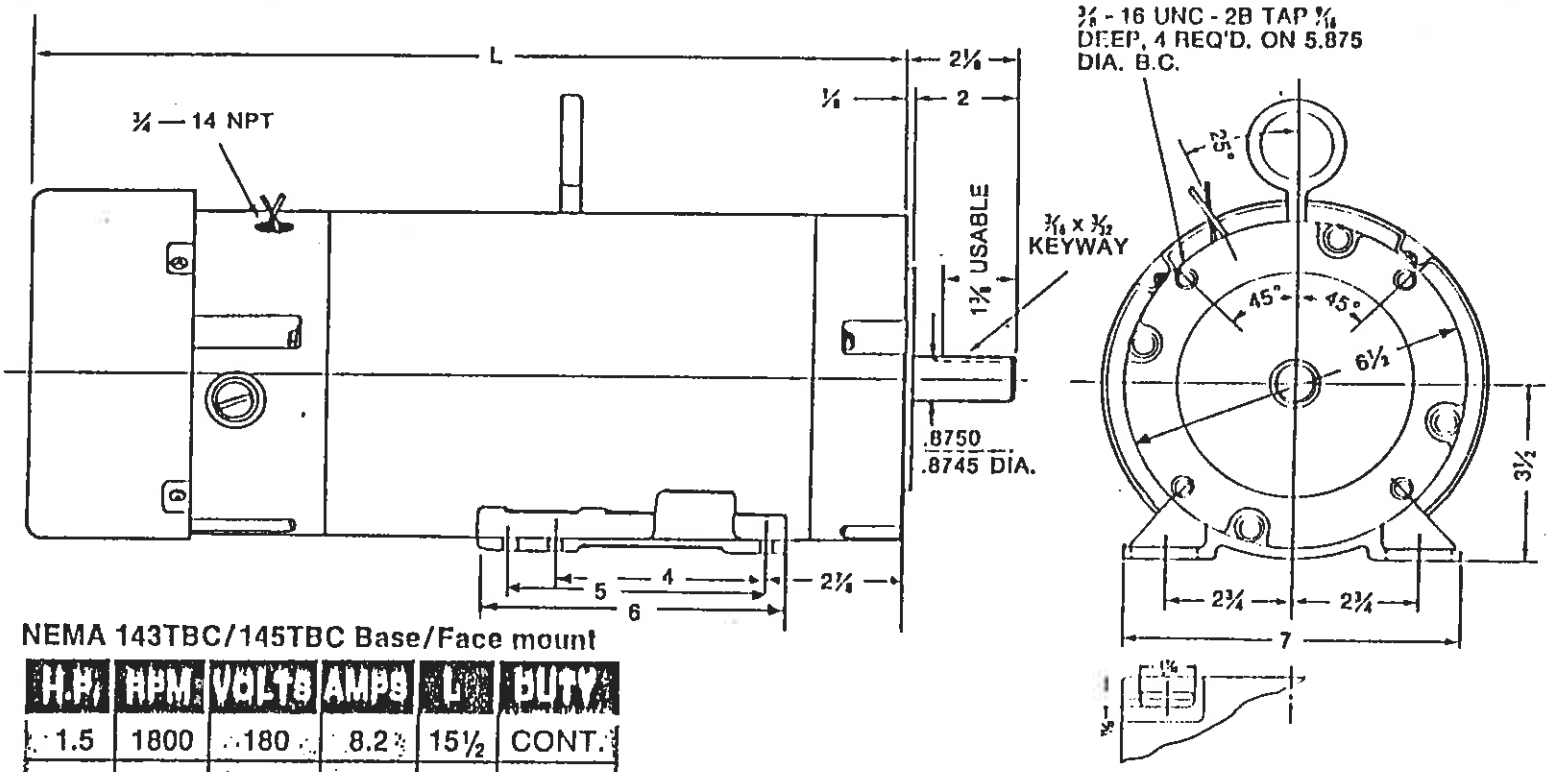

NEMA 143TBC/145TBC Base/Face mount

H.P.	RPM	VOLTS	AMPS	L	DUTY
1.5	1800	180	8.2	15½	CONT.
[illegible]	1800	180	11.6	16½	CONT.

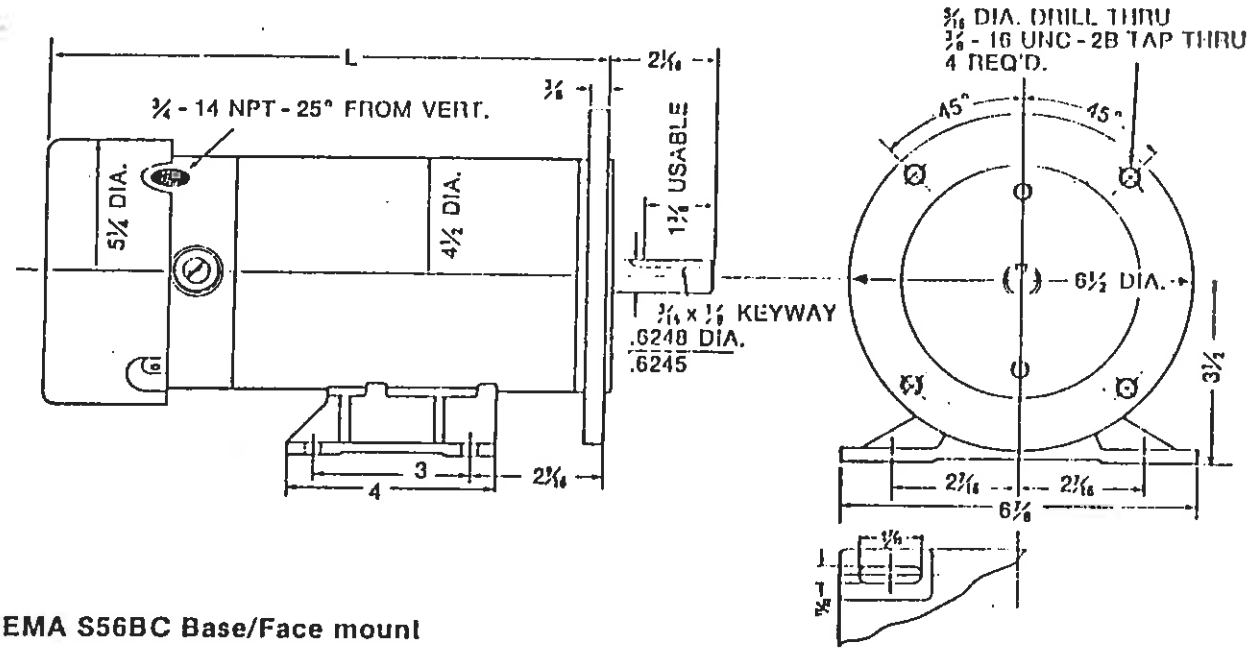

NEMA S56BC Base/Face mount

180 V.

H.P.	RPM	VOLTS	AMPS	L	DUTY
½	1725	180	2.8	10¾	CONT.
¾	1725	180	3.5	12¾	CONT.
1	1725	180	5.35	14¾	CONT.

90 V.

H.P.	RPM	VOLTS	AMPS	L	DUTY
½	1725	90	5.35	10¾	CONT.
¾	1725	90	8.1	12¾	CONT.
1	1725	90	10.6	14¾	CONT.

Lubrication

REDUCERS MAY BE FILLED TO THE PROPER LEVEL AT THE FACTORY WITH AGMA No. 8 compounded oil. AFTER INSTALLATION OF THE BREATHER PLUG, UNIT IS READY FOR USE. Before installing breather plug, refer to instruction tag and determine proper position according to reducer mounting.

We recommend an initial oil change after 250 hours of operation, then every six months or every 2500 hours of service under Class I Service. If fluctuating temperatures, humid, dirty or corrosive environment, oil changes should be made more frequently. Frequency can be established by oil sample analysis.

KEEP YOUR OIL CLEAN

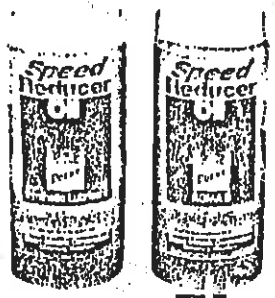

Doerr Electric replacement oil

To order oil, request:

Doerr part no. 00019001 — synthetic AGMA #7EP (−40°F to 150°F)

Doerr part no. 00019101 — AGMA #8 (50°F to 125°F)

Oil is packed 12 one quart bottles per carton, minimum ship one carton.
Contact DEC Service Dept. for order information.

OIL CAPACITIES*

UNIT TYPE	UNIT SERIES 133	175	206	262	325
Worm Over	14	20	27	49	84
Worm Under	17	22	28	49	73
Vertical Output	10	15	20	37	63
"J" Mount	13	18	23	38	63

*Capacities in approximate ounces. On double reduction units determine capacity of both primary and secondary reducers.

OIL LEVELS*

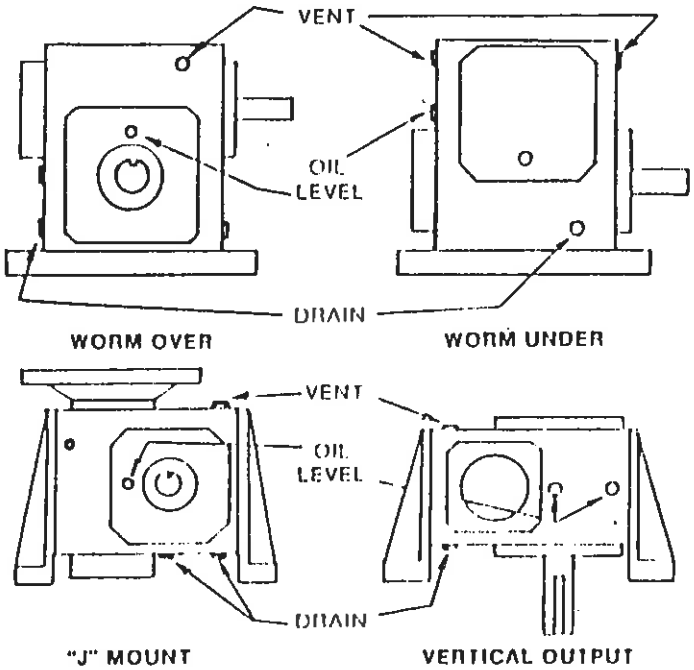

*On double reduction units fill and vent each unit to levels shown.

DOERR ELECTRIC

MAINTENANCE INSTRUCTIONS

STANDARD REDUCERS SERIES 133, 175, 206, 262, 325

INDEX

MAINTENANCE INSTRUCTIONS FOR STANDARD REDUCERS
Series 133, 175, 206, 262 and 325

INTRODUCTION

The following instructions apply to standard Worm Gear Reducers. When ordering parts or requesting information specify all information stamped on the reducer nameplate. The nameplate will also identify the type of lubricant to be used.

EQUIPMENT REQUIRED

In addition to standard mechanic's tools, the following equipment is required: arbor press, wheel puller, torque wrench, dial indicator, seal driver, bluing, Permatex No. 2 and Permatex No. 3, snap ring pliers for internal and external rings.

GENERAL INSTRUCTIONS

Housings — Clean external surfaces of reducer before removing seal cages and end covers to prevent dirt from falling into the unit. Record mounting dimensions of accessories for reference when reassembling. If it is necessary to remove the reducer from its operating area, disconnect all connected equipment and lift reducer from its foundation.

Seals — Replacement of all seals is recommended when a unit is disassembled. However, if seals are not to be replaced, protect seal life by wrapping shaft with thin, strong paper coated with oil or grease before removing or replacing seal case assembly. Clean the shaft but do not use any abrasive material on the shaft surface polished by the seal.

CAUTION

If the reducer is painted, extreme care should be taken to mask the shaft extensions and rubber surface of the seals. Paint on the shaft adjacent to the seal or on the seal lip will cause oil leakage.

TO CHANGE OUTPUT SHAFT DIRECTION

To change the hand of a unit from left hand to right hand, or vice versa, the following instructions apply:

1. Remove drain plug and drain oil from unit.
2. Remove end cover and seal cage cap screws; then while supporting output shaft remove end cover and shims from the unit.
3. Remove output shaft and seal cage together from extension side.

   NOTE: Keep shims with their respective seal cage and end cover.
4. Insert seal cage, shims and sub-assembly into the housing from the side opposite from which they were removed. Insert seal cage cap screws and tighten with light pressure.
5. Assemble end cover and shims. Insert end cover cap screws and tighten with light pressure.
6. Turn high speed shaft in both directions to see that gear train is running freely.
7. Cross tighten seal cage and end cover cap screws to torques listed in Table 1.

TABLE 1. CAPSCREW TIGHTENING TORQUE

Capscrew Diameter	1/4 - 20 UNC	5/16 - 18 UNC	3/8 - 16 UNC
Torque (in. lbs.) Dry	96	204	360

UNIT DISASSEMBLY, PARTS SERVICE, AND ASSEMBLY

Disassembly:

1. Remove drain plug and drain oil from unit.
2. Low speed shaft (gear shaft) removal:
   - A. Remove end cover and seal cage cap screws.
   - B. With a firm hold on the output extension remove end cover and shims.
   - C. Carefully slide output shaft assembly and seal cage out extension side.
   - D. Slide seal cage off low speed shaft using caution to prevent damage to seal lips.
   - E. Wire or tie the shims to their mating end cover and seal cages. They will be available for reference when assembling the unit.
3. High speed shaft (worm shaft) removal:
   - A. Position unit with input shaft down. With a small chisel make a groove in the stamped steel cover opposite the shaft extension. Pry cover off.

B. Remove internal snap ring from housing bore.
C. Reposition the housing with the worm shaft horizontal. Using a plastic hammer gently tap on the end of the shaft extension to feed worm shaft assembly through housing and out.

Parts Service:

1. **Housing** — Clean inside of housing with kerosene or solvent and then dry.
2. **Seal cages and end cover** — Remove dirt from joint faces, wipe clean and dry.
3. **Air vent** — Wash in kerosene, blow clean and dry.
4. **Seals** — To replace seals without dismantling reducer refer to steps C through F below. To replace seals when the entire reducer is dismantled and coupling hubs, sprockets, pulleys, pinions, keys, etc. have been removed the following instructions apply:

   NOTE: Replacement of all seals is recommended when a unit is disassembled.

Caution

New seals will leak if the seal lips or if seal's rubbing surface on the shaft has been altered. Protect seal lips at all times. Clean the shaft but do not use any abrasive material on the shaft surface polished by the seal.

A. Block up seal cages and press or drive out seal.
B. Remove old sealing compound from seal seat in cage if it is present. If a seal with rubber coating on the outside diameter is used, no Permatex is necessary. If no rubber coating is on seal outside diameter, coat seal cage bore with Permatex No. 3 or equivalent immediately before assembly.

   To prevent possible damage to seal lips, do not reassemble seals until high speed and low speed shafts have been reassembled to the housing. Then see steps E and F below.
C. See Figures 1 through 4—To replace seals without dismantling reducer, proceed as follows:

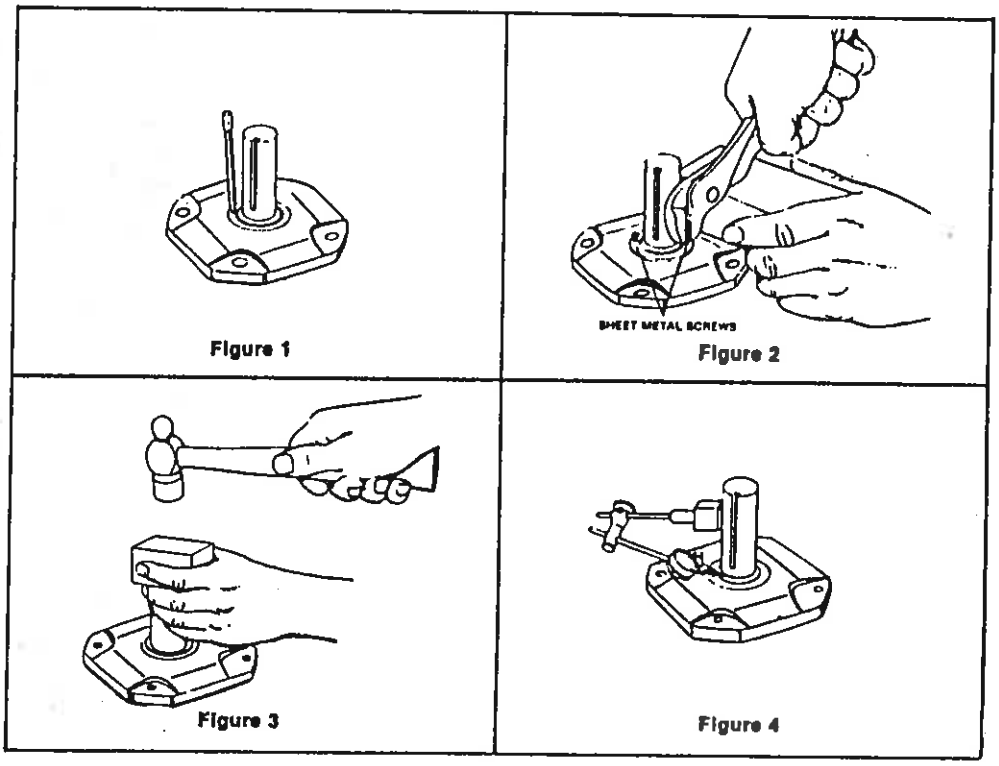

Figure 1 Figure 2 Figure 3 Figure 4

Caution

Do not damage shaft; new seals will leak if seal contacting surface is marred. Use punch and place two or more holes in steel casing of seal, Figure 1. (The steel casing may be rubber coated) Insert sheet metal screws, leaving the heads sufficiently exposed so they can be pried up or grasped with pliers, Figure 2. Do not drill holes because chips may get into the unit.

D. Work seal loose. Be careful to keep all metal or dirt particles from entering unit. Remove old sealing compound from seal seat if it is present. Also remove burrs and sharp edges from shaft. Clean with rag moistened with solvent. Do not use abrasive material on shaft seal contacting surface.

Caution

E. Protect seal lips when handling; seal leakage will result if these are damaged. If a seal with rubber coating on the outside diameter (O.D.) is used, no Permatex is necessary. If no rubber coating is on seal O.D., coat seal cage bore with Permatex No. 3 or equivalent. Coat seal lips with oil and carefully work seal into position. Before sliding seal into position, protect seal lips from shaft keyway edges by wrappng shaft with thin, strong paper coated with oil. Position garter spring toward the inside of the unit. Place a square faced pipe or tube against the seal O.D. and drive or press seal until fully seated as shown in Figure 3. Do not strike seal directly.

F. For best performance, seat the seal square with shaft within .005" at 180°. Check with dial indicator as shown in Figure 4, Page 2, or with a straight edge and feelers, or square and feelers. To straighten a cocked seal, place tubing over the seal and tap the tube lightly at a point diametrically opposite the low point on the seal. DO NOT strike seal directly.

5. **Bearings —**
   A. Wash all bearings in clean kerosene and then dry.
   B. Inspect bearings carefully and replace those that are worn or questionable.
   NOTE: Replacement of all bearings is recommended.
   C. Use a wheel puller or press to remove worm shaft bearings. Apply force to inner race only — not to cage or outer race.
   D. Use a wheel puller or press to remove output bearing inner races.
   E. New seal cages and end covers must be used when replacing output bearings. Output bearing outer races must be pressed in square and seated completely.
   F. To replace output bearing inner races and all input bearings, heat bearings in an oil bath or oven to maximum of 290 degrees F (143 degrees C). Slide high speed shaft bearings onto the oiled shaft until seated against the shoulder or snap ring of the shaft. Slide low speed shaft bearings onto the oiled shaft against the gear spacer.
   G. Thoroughly coat all bearings with lubricating oil.

6. **Worm, gear and shafts**
   A. Worm and high speed shaft—since all worms are integral with the high speed shaft, any wear or damage to the worm will necessitate replacing both.
   B. Press shaft out of bronze worm gear. To reassemble gear and low speed shaft, freeze shaft or heat gear. Do not exceed 200 degrees F (93 degrees C). Insert key into shaft keyway and press shaft into oiled gear bore. The short hub of the gear must be assembled toward snap ring on the shaft.
   NOTE: It is advisable to replace both the worm and worm gear should either of the assemblies require replacement.

Unit Reassembly:

1. **Preliminary**
   A. Check to see that all worn parts have been replaced, gear and bearings coated with oil and all parts cleaned. Remove all foreign matter from unit feet. The feet must be flat and square with each other.
   B. Before starting to reassemble reducer, add old shims or replace with new shims of equal thickness.
2. **High Speed Shaft (Worm Shaft) Assembly**
   A. Lubricate bearing bores of housing and insert high speed shaft sub-assembly from opposite extension end into housing until seated against shoulder in bore. Tap the end of the shaft lightly with a plastic hammer to feed bearings through bores.
   B. Lock high speed sub-assembly in housing bore with lock ring.
   C. Coat outside diameter of stamped steel end cover with Permatex No. 2 and press into high speed bore opposite extension end until flush with housing. If steel endcover is rubber coated then no Permatex is necessary.
3. **Low Speed Shaft (Gear Shaft) Assembly**
   A. Determine output shaft direction.
   B. Assemble low speed shaft assembly, seal cage, and end cover with shims on both seal cage and end cover. Torque cap screws to torques listed in Table 1. Rotate the input shaft to seat output bearings.
   C. Moving the shaft back and forth by hand, check axial float with dial indicator as shown in Figure 5. Axial float must be .0005-.003 with .0005 being the absolute minimum. Do not preload bearings. If the axial float is not as specified add or subtract required shims under end cover.

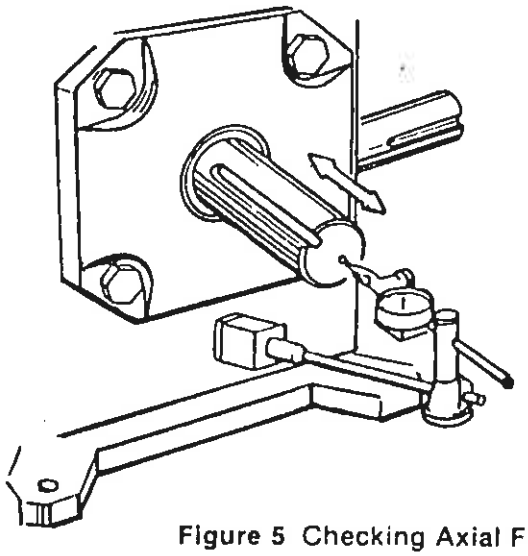

Figure 5 Checking Axial Float

   D. Remove output shaft with seal cage and apply bluing to entire worm thread. Worm thread must be clean of oil. Reassemble output shaft and seal cage with output key facing up.
   E. Use a rag to apply hand pressure to the output shaft and rotate the high speed shaft until output key is down. Return output shaft to original position by reversing rotation. Remove output shaft and seal cage to inspect contact. Compare with Figure 6. If contact is not correct move assembly in the direction shown in Figure 6 by adding shims to the side to which the arrow points after removing them from the opposite side. Repeat steps D and E until contact pattern is correct.
   F. Recheck axial float with dial indicator.
   G. When contact pattern is correct tighten seal cage and end cover cap screws to torques listed in Table 1 page 1.

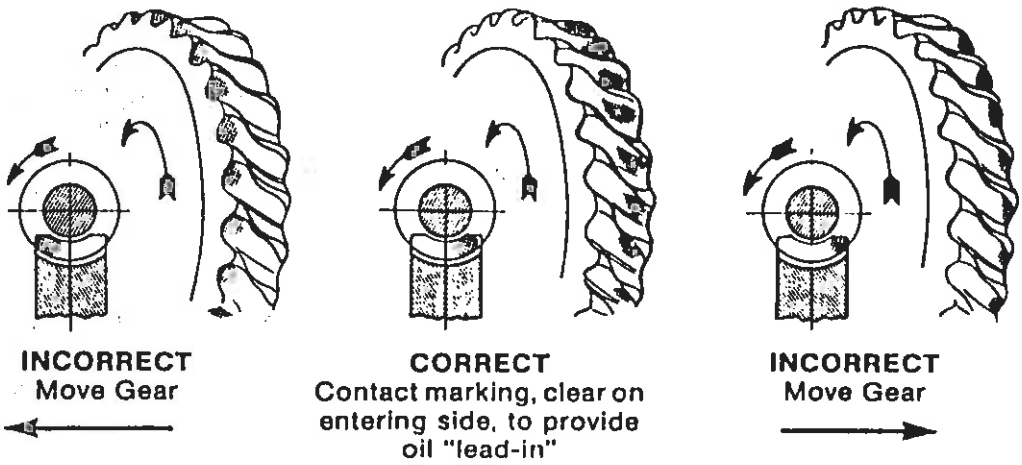

Figure 6 Gear Contact Pattern

4. **Seals** — To reassemble seals to unit, see Parts Service Steps 4E and 4F, page 3.

5. **Motorized Coupling Adapter**
Certain mounting dimensions should be adhered to when removing motor and coupling assembly for service. When ordering replacement coupling halves (metal gear), specify correct bore diameter. See Table 2 for mounting dimensions and available bore sizes.

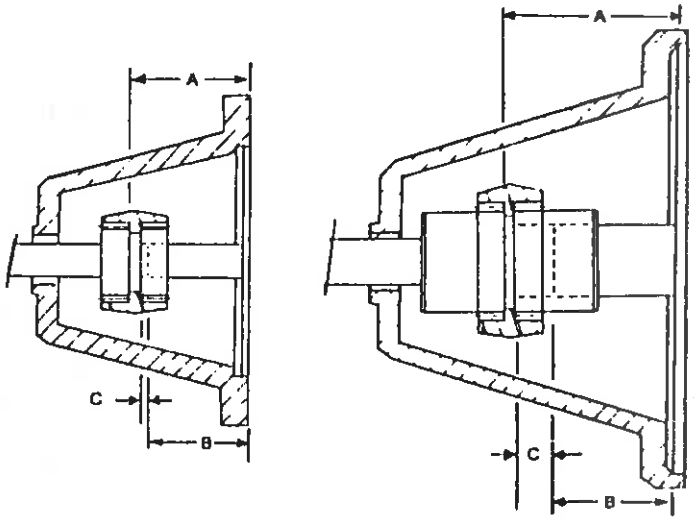

56C, 143TC & 145TC
Model 15

182TC, 184TC, 213TC & 215TC
Model 22

Figure 7 Motorized Coupling Adaptor

TABLE 2. COUPLING ADAPTOR DATA

"C" COUPLING MOUNTING DATA

N.E.M.A. Frame No.	Mounting Dimensions		
	Reducer A ± 1/64	Motor B ± 1/64	C
56C	2 5/16	2 1/16	1/16
143TC	2 5/16	2 1/8	—
145TC	2 5/16	2 1/8	—
182TC	3 5/16	2 5/8	1/2
184TC	3 5/16	2 5/8	1/2
213TC	3 5/16	3 1/8	—
215TC	3 5/16	3 1/8	—

BORE SIZES AVAILABLE

MODEL 15		MODEL 22	
Bore	Kwy.	Bore	Kwy.
.500	None	—	—
.500	1/8 x 1/16	—	—
.625	3/16 x 3/32	.625	3/16 x 3/32
.750	3/16 x 3/32	.750	3/16 x 3/32
.875	3/16 x 3/32	.875	3/16 x 3/32
—	—	1.125	1/4 x 1/8
—	—	1.375	5/16 x 5/32

6. **Final Inspection**
   A. Turn gear train over by hand as a final check.
   B. Re-install reducer and accessories.

   CAUTION: Discard motor key. Use only special key provided with reducer. Failure to use special key will make assembly impossible.

   C. Fill reducer with the recommended oil to proper level. See Fig. 8 for standard oil levels. (Type of oil recommended — see nameplate).
   D. Spin test for three minutes and check for noise, leakage, and rapid temperature rise.

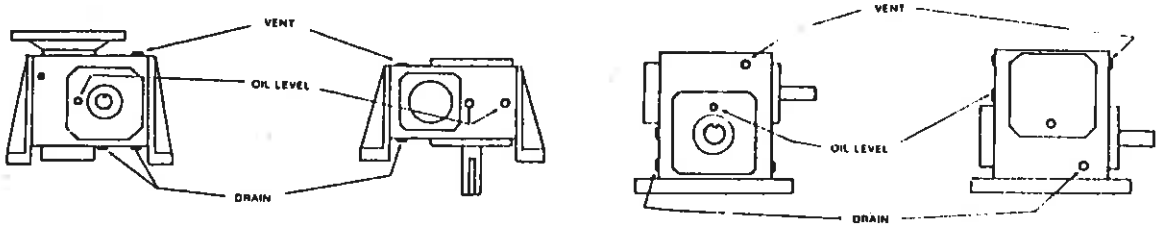

Figure 8 Standard Oil Levels

PREVENTATIVE MAINTENANCE

A. After first week check all external cap screws and plugs for tightness.
B. Periodically, check oil level when gears are at rest. Add oil if needed. Do not fill above mark indicated by level because leakage and overheating may occur.
C. Oil changes — For normal operating conditions, change oil every six months or 2500 hours, whichever occurs first. Also if the unit is operated in an area where temperatures vary with the season, change the oil viscosity to suit the temperature. Most lubricant suppliers can test oil periodically and recommend economical oil change schedules.

CAUTION

See nameplate for type of lubricant to be used.

STORED AND INACTIVE UNITS

1. Each unit is shipped with oil that will protect parts against rust for a period of 4 months in an outdoor shelter or 12 months in a dry building after shipment from the factory. Indoor dry storage is recommended.
2. If a unit is to be stored or is to be inactive after installation beyond the above periods, fill the unit completely with oil.

CAUTION

Before starting a stored unit or re-starting an inactive unit, the oil level should be returned to the proper value as indicated by the oil level.

PARTS ORDERING INSTRUCTIONS

When ordering replacement parts first locate the exploded view that corresponds to your Doerr Electric gear reducer. Then determine which parts must be ordered. To order the parts, please provide the following:

1. Complete Model Number (Nameplate)
2. Item Number (Exploded view and parts list)
3. Part Description (Parts list)

Note that one parts list covers all five exploded views. Although a single item number may refer to the same part on all five exploded views, it is incorrect to assume that these parts are interchangeable. They are not. Therefore, it is imperative that items 1 through 3 above be provided when ordering your parts.

Failure to provide this information will only slow or prevent the processing of your order.

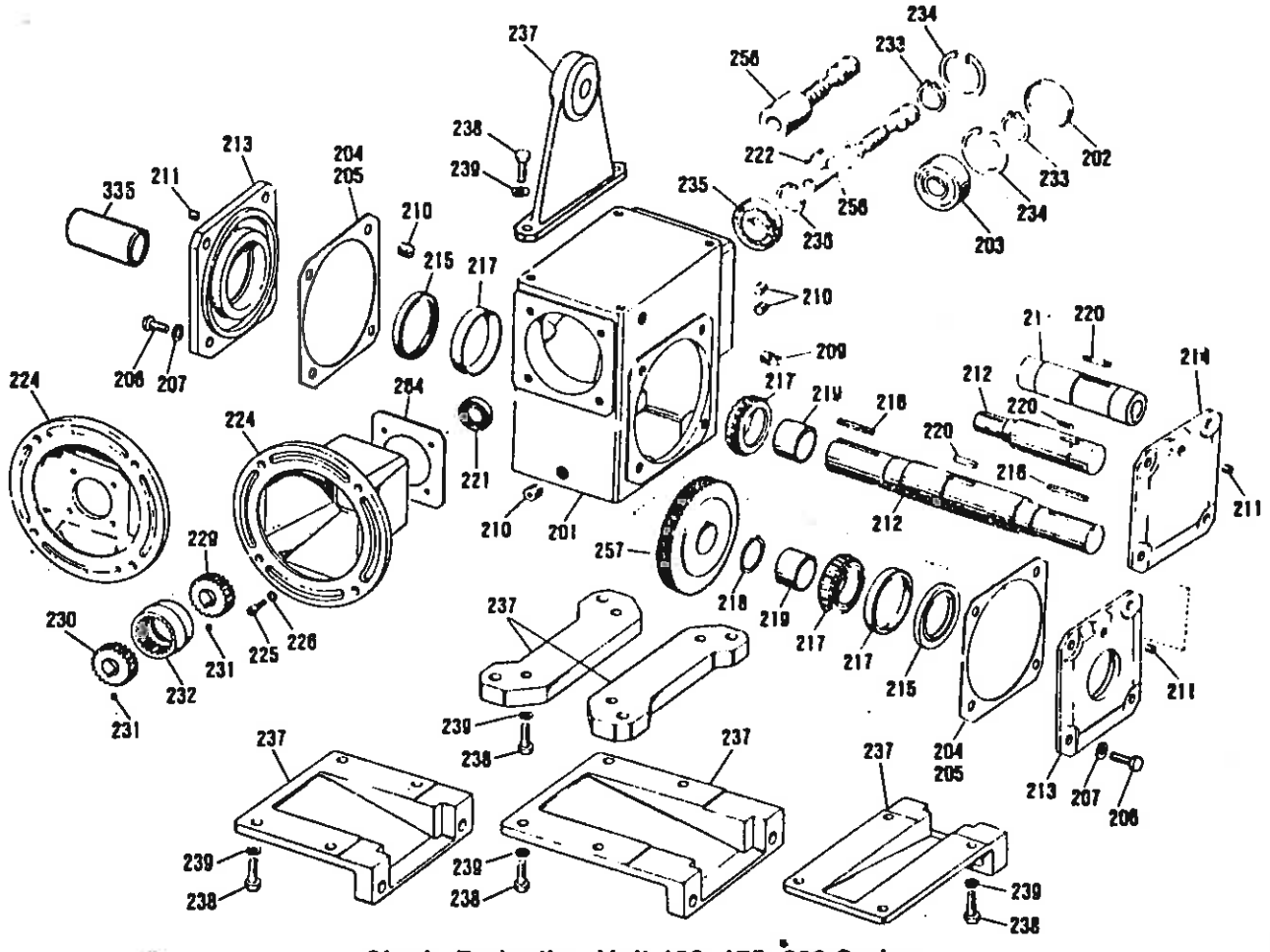

Single Reduction Unit 133, 175, 206 Series

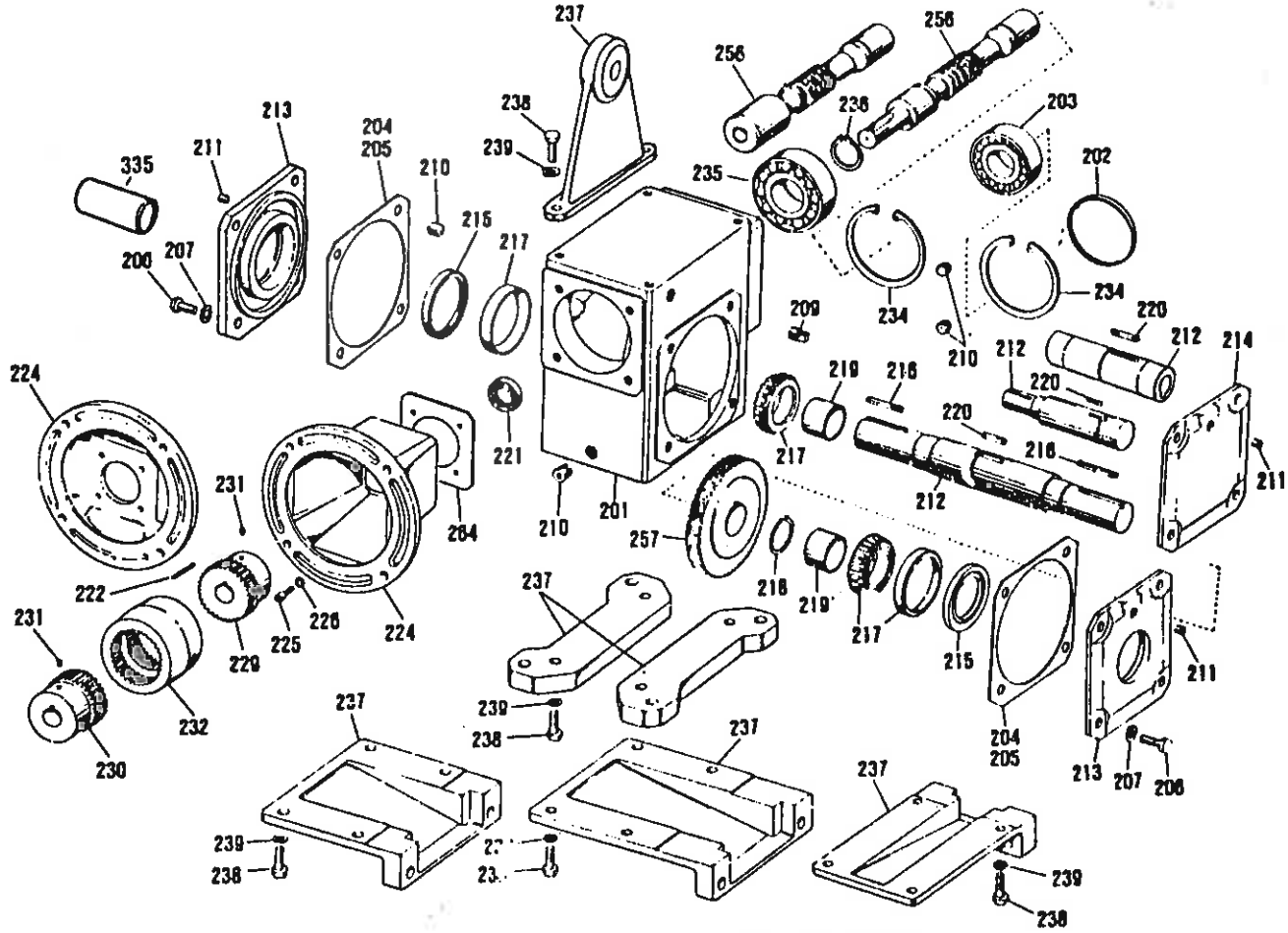

Single Reduction Unit 262, 325 Series

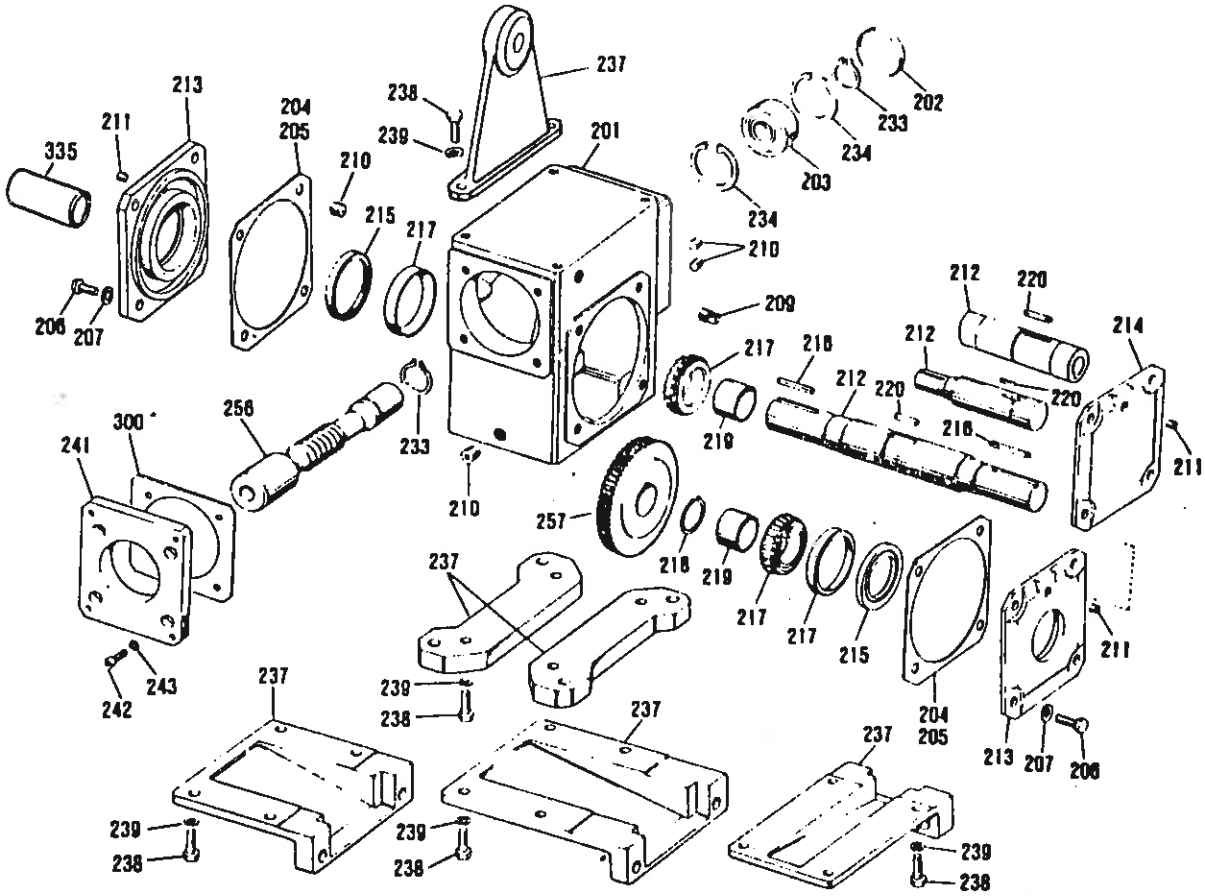

Double Reduction Secondary Unit 133, 175, 206 Series

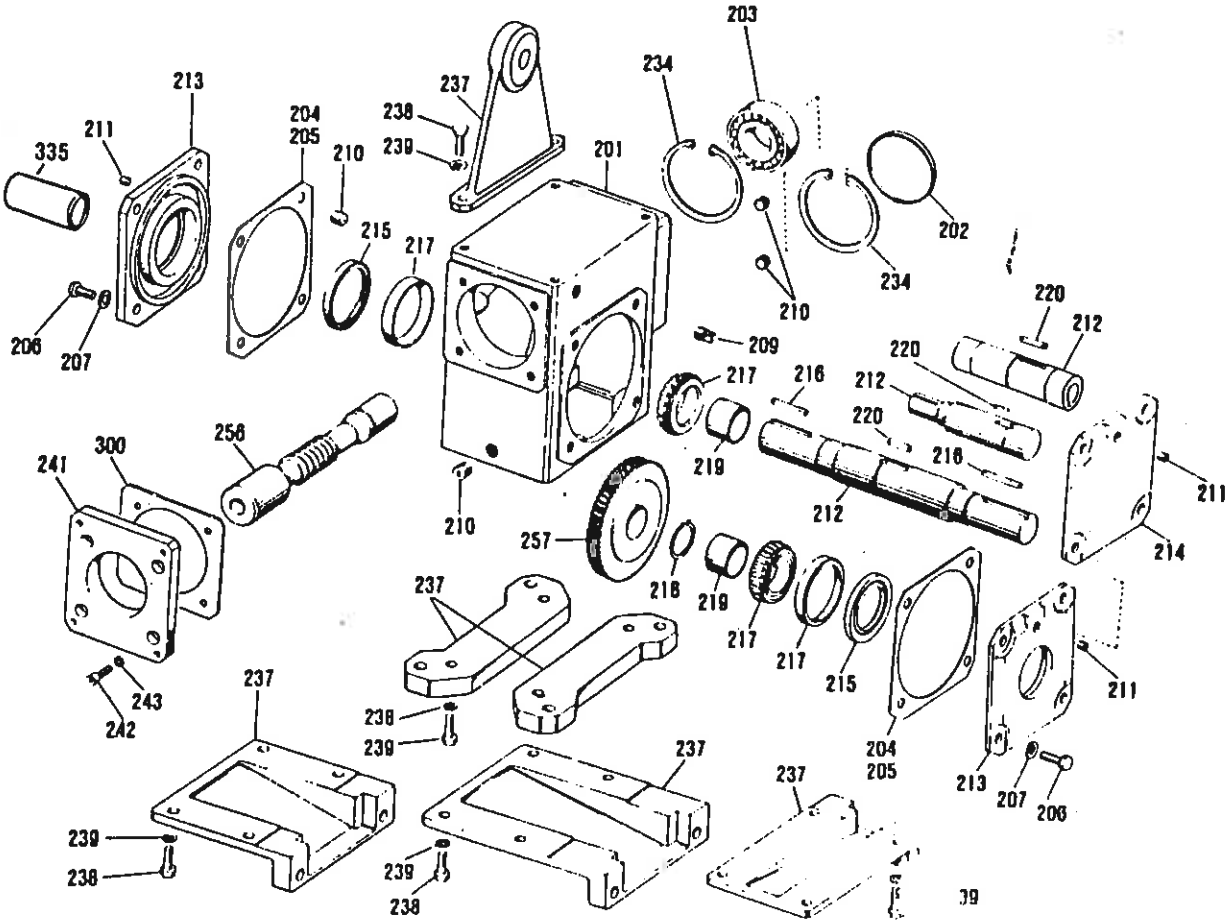

Double Reduction Secondary Unit 262, 325 Series

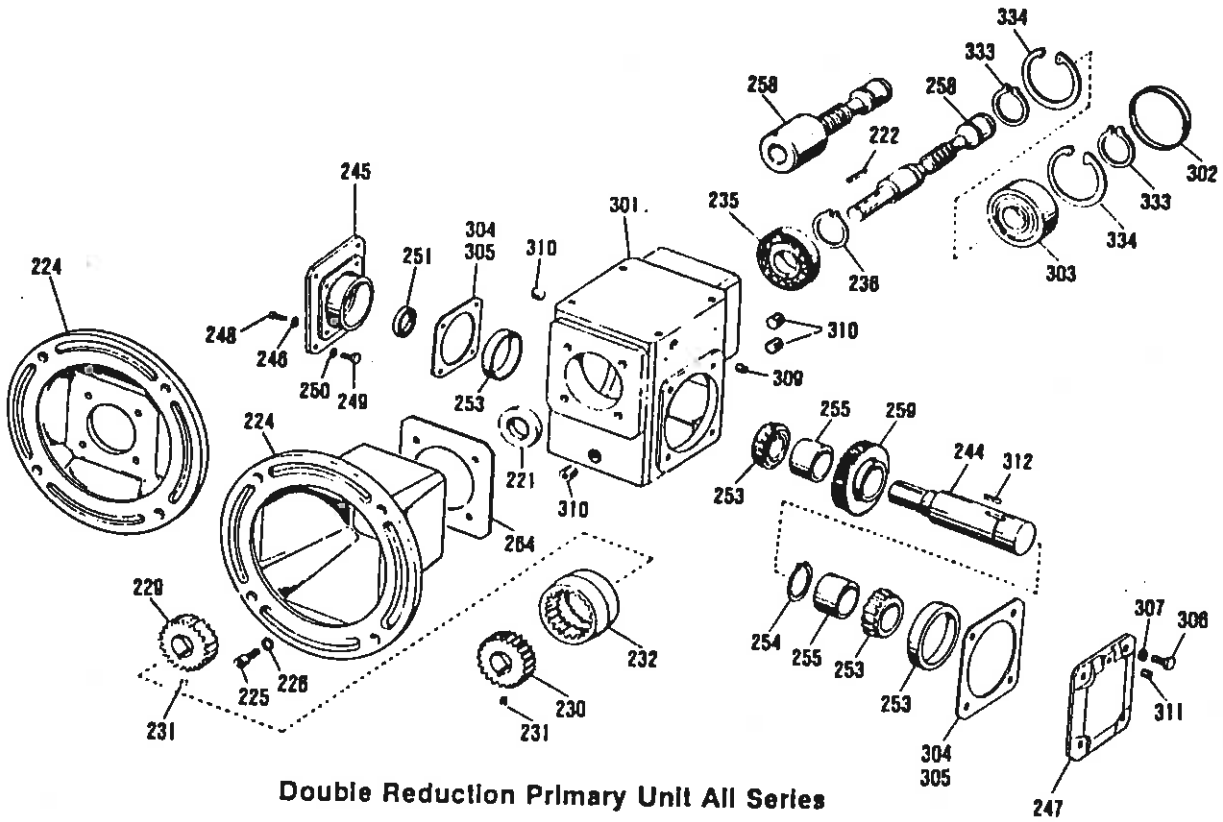

Double Reduction Primary Unit All Series

PARTS LIST
(Applies to all exploded views)

ITEM	DESCRIPTION	ITEM	DESCRIPTION	ITEM	DESCRIPTION
201	Housing	229	Coupling Hub (Unit)	255	Spacer
202	End Cover	230	Coupling Hub (Motor)	256	Worm
203	Bearing	231	Setscrew	257	Gear
204	Shim (.019 Thick)	232	Coupling Sleeve	258	Worm
205	Shim (.007 Thick)	233	Lock Ring	259	Gear
206	Capscrew	234	Lock Ring	260	Thrust Plate
207	Lock Washer	235	Bearing	261	Capscrew
209	Vent Plug	236	Lock Ring	264	Gasket
210	Pipe Plug	237	Base	300	Gasket
211	Pipe Plug	238	Capscrew	301	Housing
212	Output Shaft	239	Lock Washer	302	End Cover
213	Seal Cage	241	Secondary Adaptor	303	Bearing
214	End Cover	242	Capscrew	304	Shim (.019 Thick)
215	Oil Seal	243	Lock Washer	305	Shim (.007 Thick)
216	Key	244	Primary Output Shaft	306	Capscrew
217	Bearing	245	Primary Adaptor	307	Lock Washer
218	Lock Ring	246	Lock Washer	309	Vent Plug
219	Spacer	247	End Cover	310	Pipe Plug
220	Key	248	Capscrew	311	Pipe Plug
221	Oil Seal	249	Capscrew	312	Key
222	Key	250	Lock Washer	333	Lock Ring
224	Motor Flange	251	Oil Seal	334	Lock Ring
225	Capscrew	253	Bearing	335	Shaft Cover
226	Lock Washer	254	Lock Ring		

Note: When ordering replacement parts, specify model number, item number, and part description.